Sit-Stand Working Guidelines

YO-YO DESK® SLIM

Top 5 Tips for Users of Sit-Stand

- **Build it up gradually.** Start with 20 minute standing, then sit for 40 minutes and repeat throughout the day
- **Avoid excessive sitting and standing.** Keep moving around, take frequent breaks, and make a conscious effort to mix it up. Standing all day can lead to back, knee or foot problems
- Make sure you have **comfortable footwear** and think about a comfort mat
- Find out what **things you prefer doing standing** e.g phone calls, clearing out your inbox and routine deskwork
- Also find out the **things you do better sitting** e.g concise and creative writing, proof reading and in depth analysis

Appropriate Height

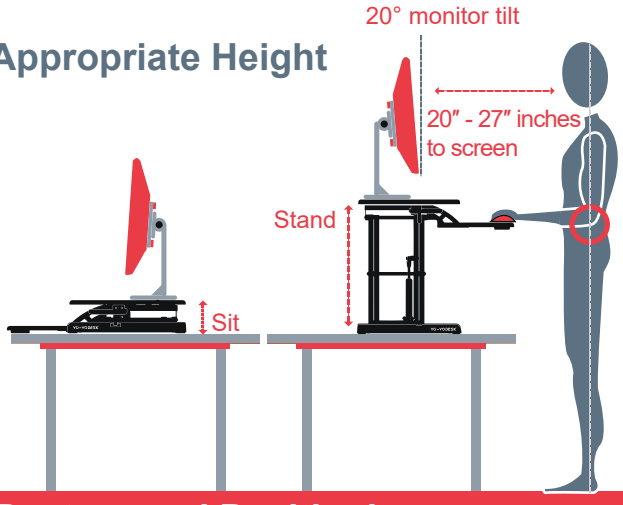

Head up, vision directed to top half of screen

Wrists should be at elbow height or slightly below

Posture and Positioning

To avoid and reduce suffering from pain or tiredness whilst standing - it is vital you adopt correct posture, positioning and move more

OFFICIAL PARTNER

YO-YO DESK® | ACTIVE WORKING™

Get America Standing .org | Get Britain Standing .org | Get Canada Standing .org | Get Australia Standing .org | Get Europe Standing .org

Copyright © 2018 Active Working C.I.C. All rights reserved. No part of this publication may be reproduced without the prior written permission of Active Working®.

Active Working
Top Tips

YO-YO DESK® SLIM

Sit Less & Move More

Take frequent "mini" opportunities to move up/down or away from your desk to help:

- **Activate your body**
- **Increase your metabolic rate**
- **Break down fats**
- **Reduce blood sugar levels**
- **Boost oxygen flow to your brain**

Regular movement also helps you to **maintain good postures** & **reduce muscle fatigue**. Follow our **suggested behaviours** to improve business productivity & the health & wellness in your workplace

Suggested New Habits

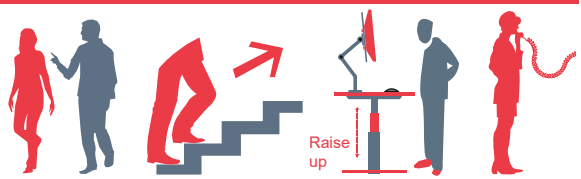

1. Attempt to **spend at least 2 hours standing** at work and increase this to 4 hours in line with individual circumstances

2. Try to **interrupt 30 minutes of sitting** with at least 5 mins of standing or 2 mins of walking

3. When standing at a desk, **wear appropriate shoes.** Consider an **anti-fatigue mat** to encourage foot movement. This will boost blood circulation & reduce fatigue

4. Hydrate - Drink plenty of water and take regular comfort breaks

5. Take frequent breaks from sitting. Spend **5 minutes each hour** walking around the office or over to a co-worker

OFFICIAL PARTNER

YO-YO DESK® | ACTIVE WORKING™

Get America Standing .org | Get Britain Standing .org | Get Canada Standing .org | Get Australia Standing .org | Get Europe Standing .org

Copyright © 2018 Active Working C.I.C. All rights reserved. No part of this publication may be reproduced without the prior written permission of Active Working®.